-SS26TSS1629_ Cotton_Wreath_Tall_Tee____DEV SIZE M 22-09-2025

THE PLACEMENT FILE

FRONT

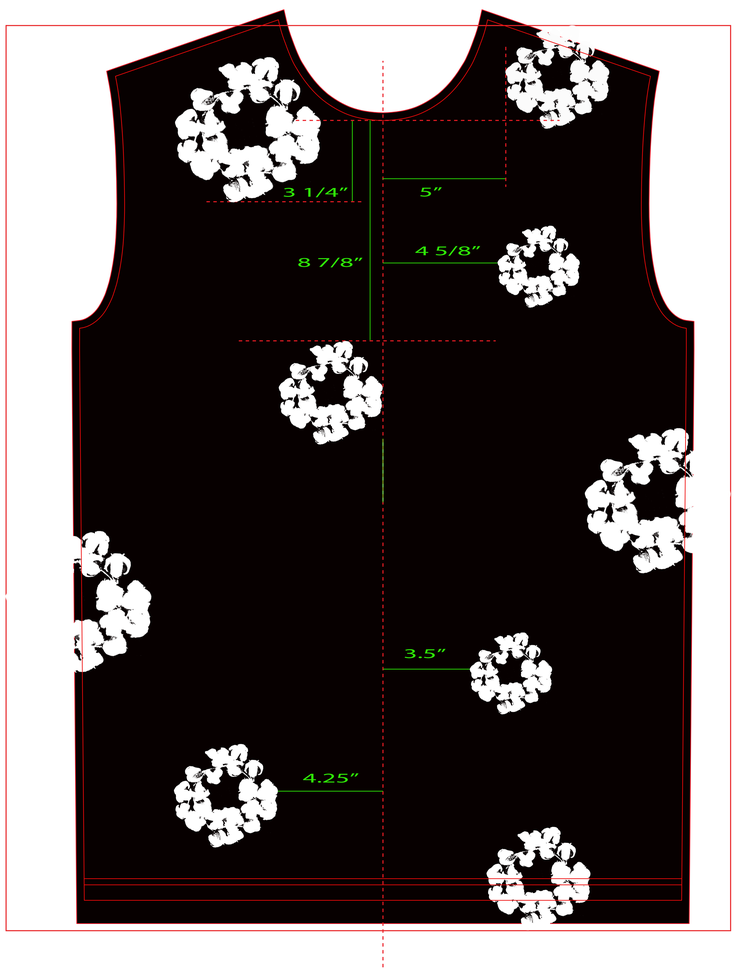

BACK

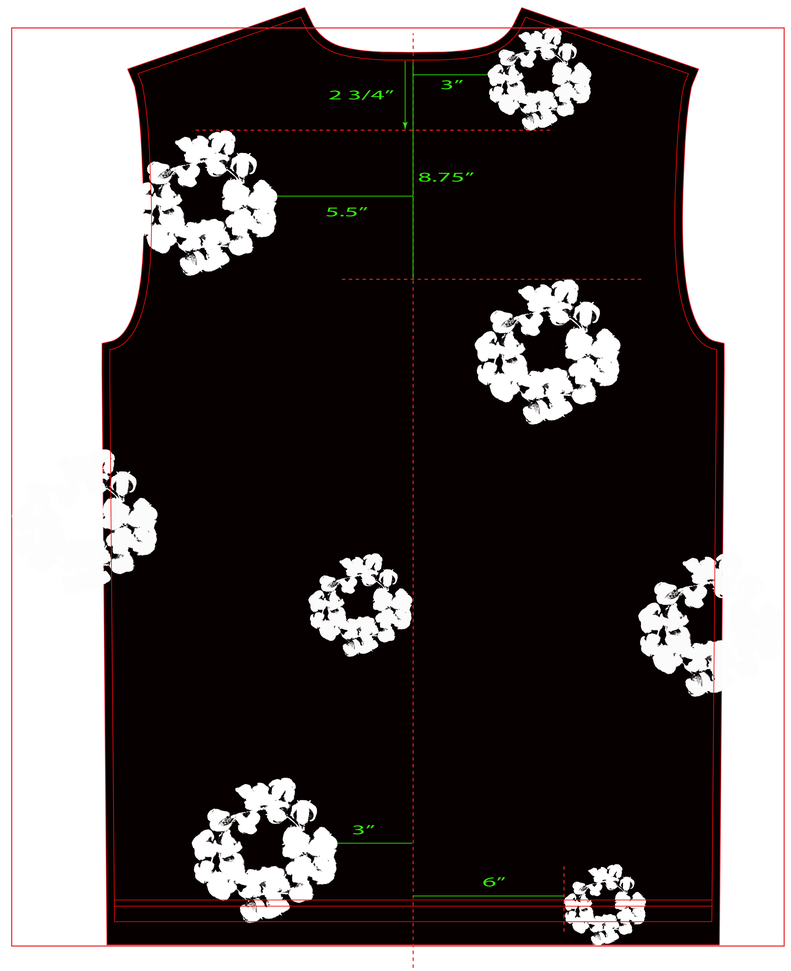

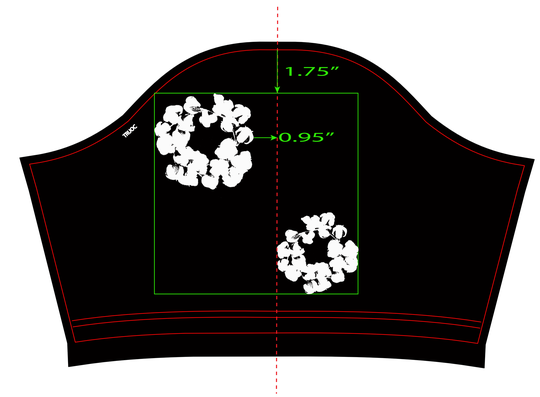

RIGHT/SLEEVE

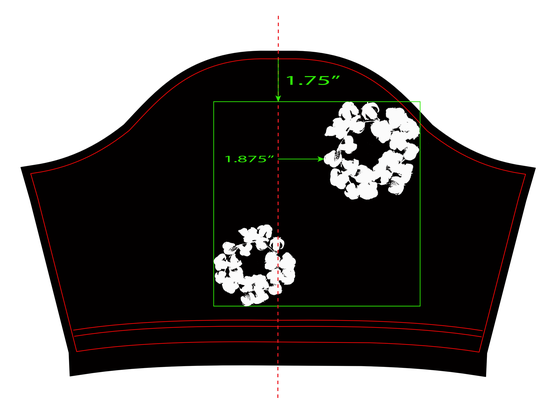

C0079-SST076

FILE PRINT

22-09-2025

ARTWORK : FRONT

W: 29.2” X H: 36.5”

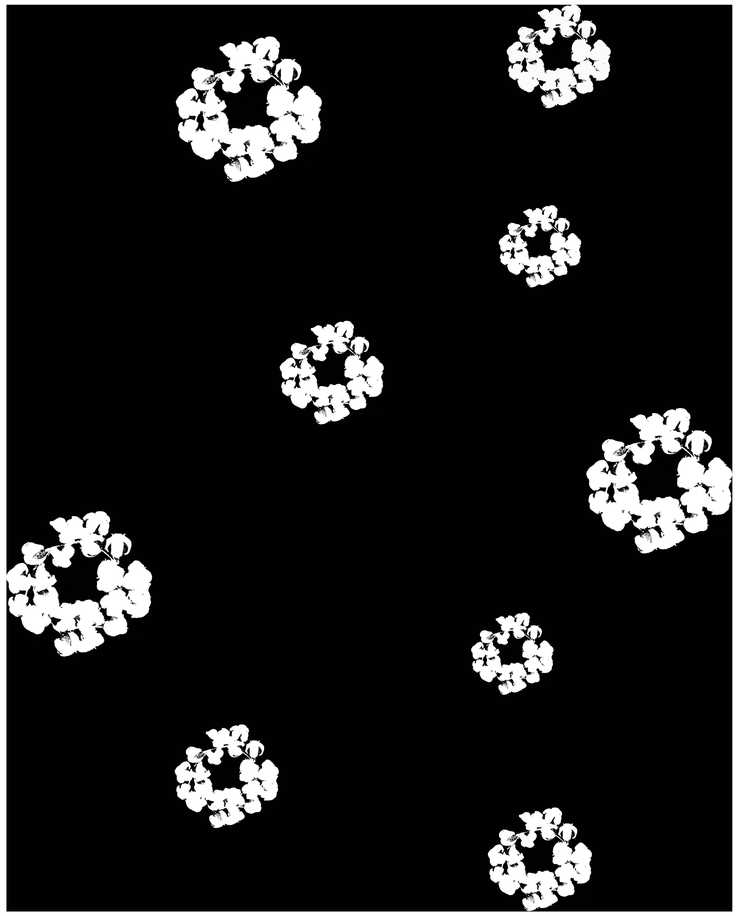

ARTWORK : BACK

W: 31.3” X H: 37”

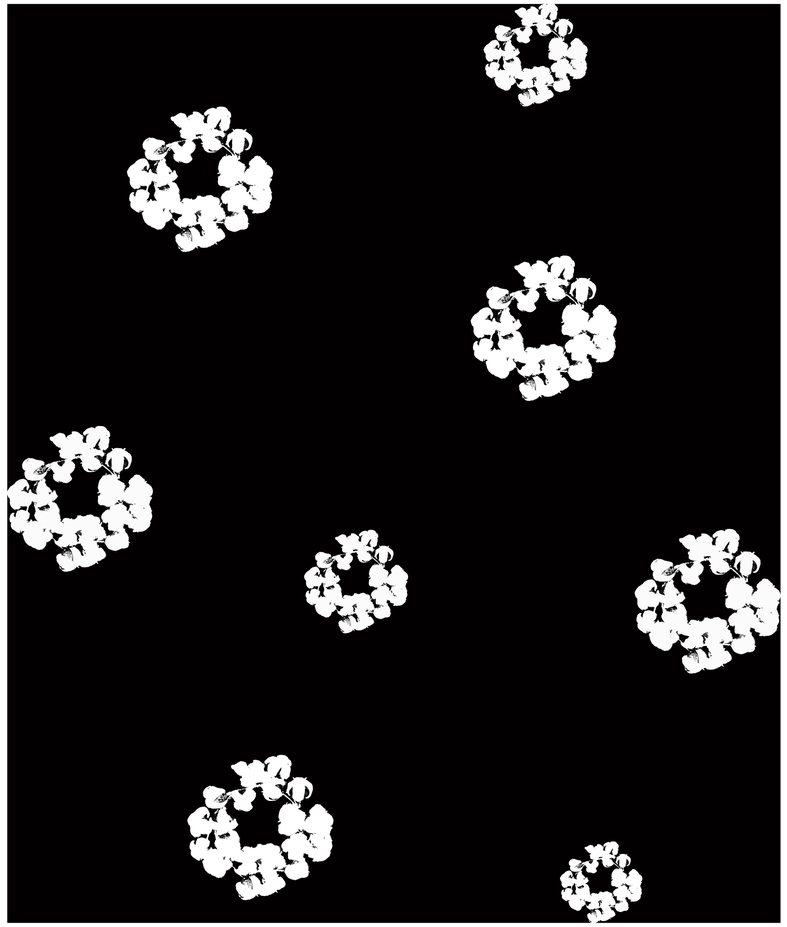

RIGHT/SLEEVE

W: 8.3” X H: 8.2”

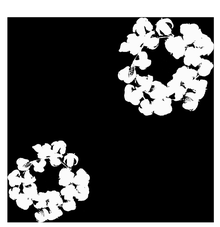

LEFT/SLEEVE

W: 8.2” X H: 8”

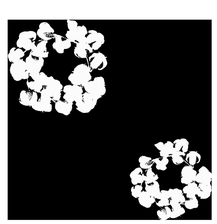

NOTE: KHÔNG IN BACKGROUND