COMMENT: TAY PHAI-VCX1

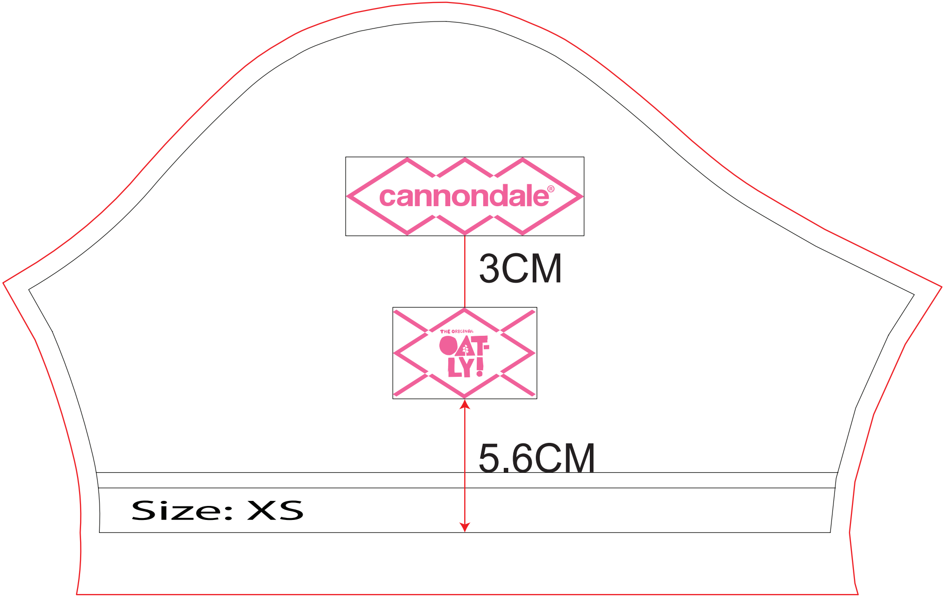
cannondale®
3CM
THE ORIGINAL
OAT-LY!
5.6CM
Size: XS

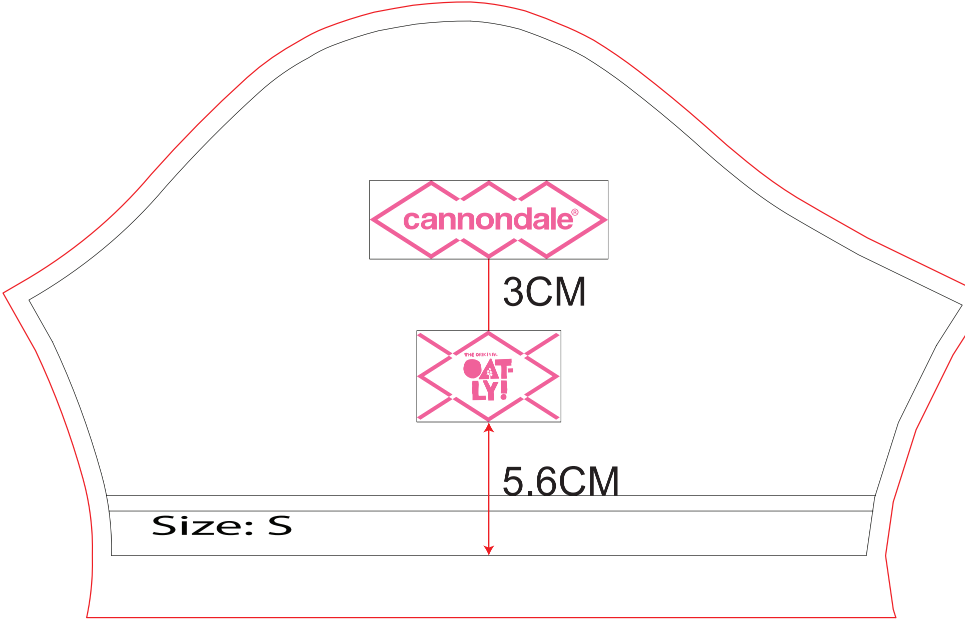
cannondale®
3CM
THE ORIGINAL
OAT-
LY!
5.6CM
Size: S

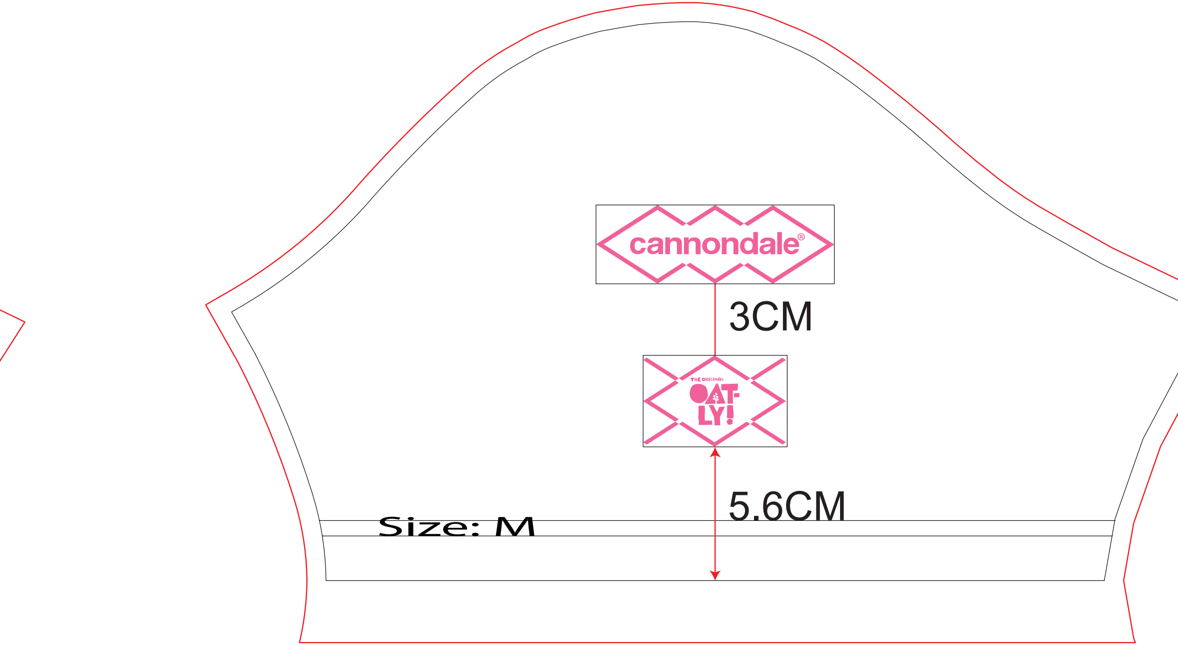
cannondale®
3CM
THE ORIGINAL
OAT-LY!
5.6CM
Size: M

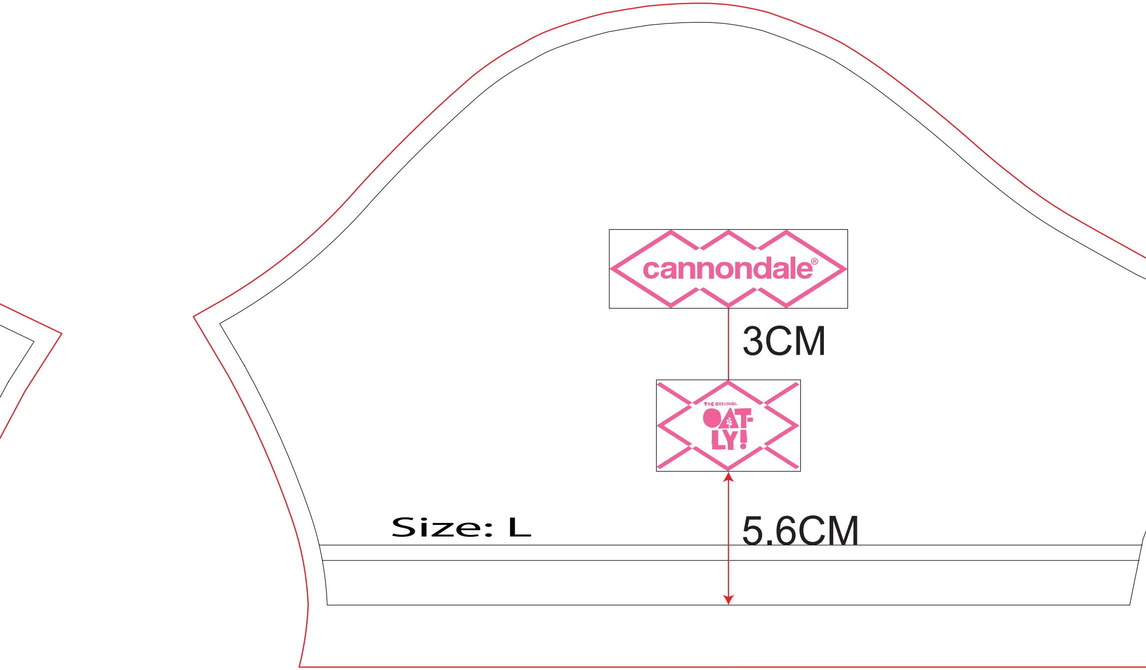
cannondale®
THE ORIGINAL
OAT-LY!
3CM
5.6CM
Size: L

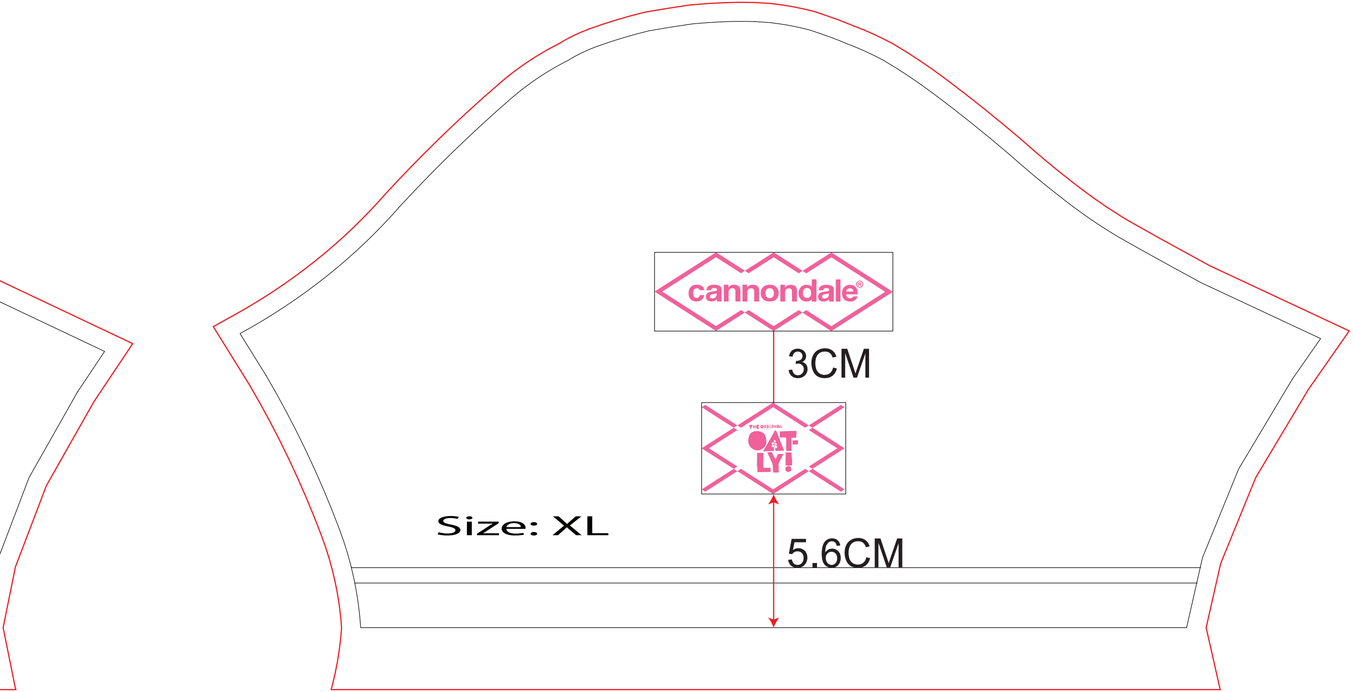
cannondale®
3CM
THE ORIGINAL
OAT-LY!
Size: XL
5.6CM

COMMENT: TAY TRAI-VCX1

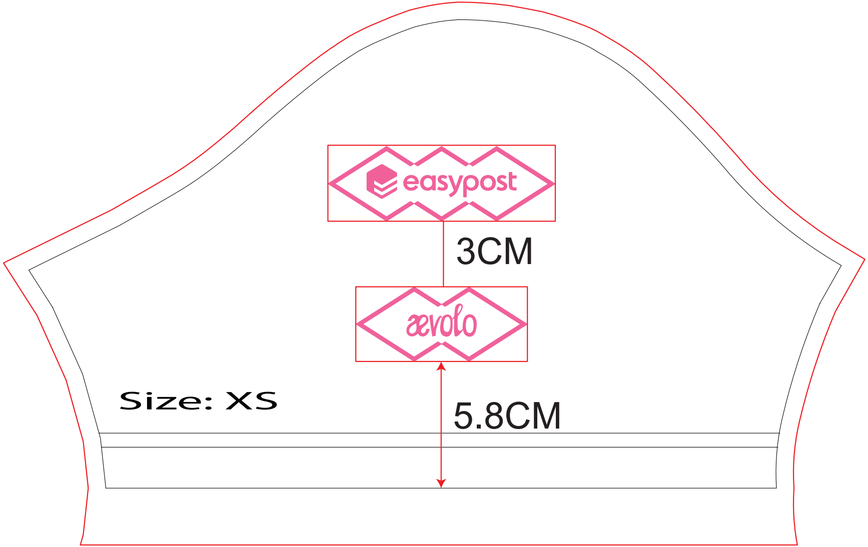
easypost
ævolo
3CM
Size: XS
5.8CM

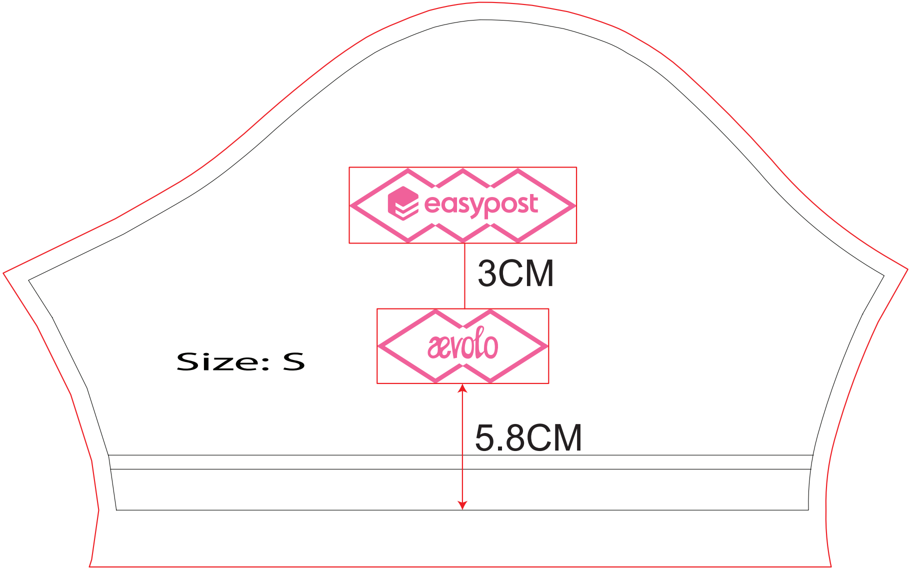
easypost
3CM
Size: S
æ volo
5.8CM

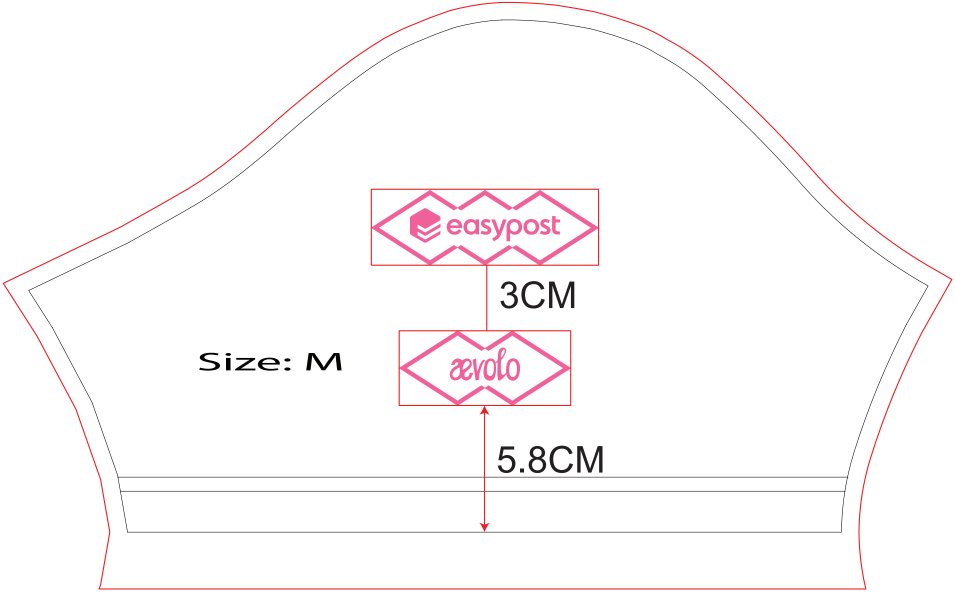
easypost
3CM
Size: M
ævolo
5.8CM

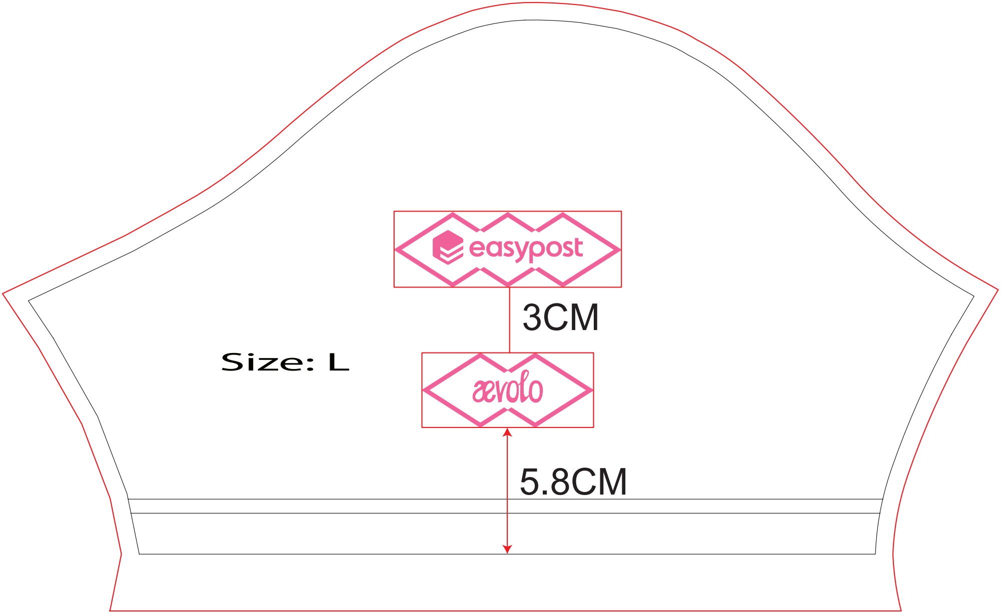
easypost
3CM
Size: L
ævolo
5.8CM

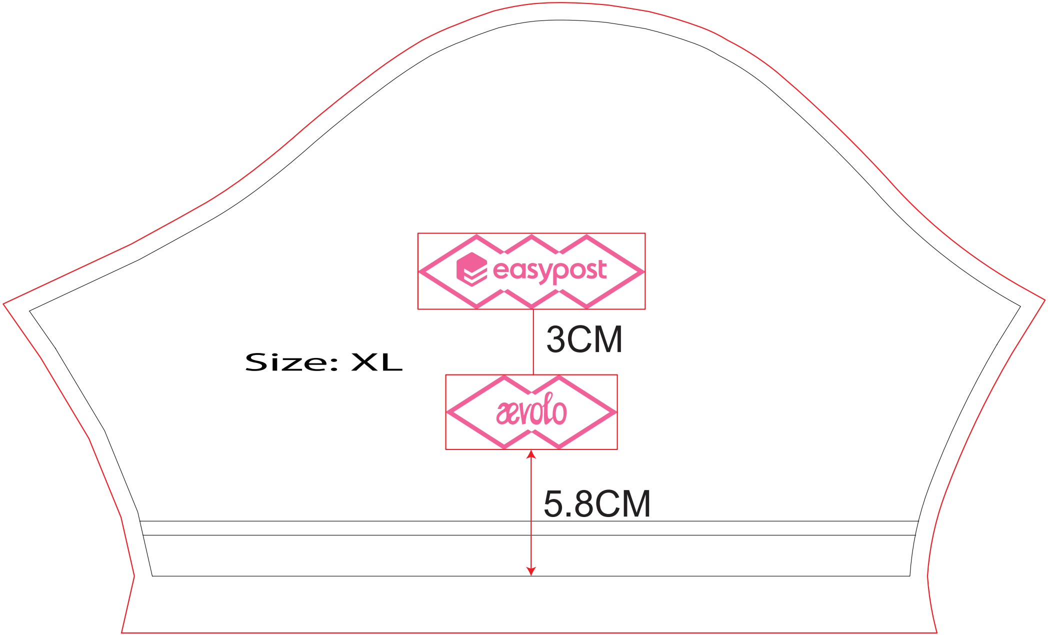
easypost
3CM
Size: XL
ævolo
5.8CM