RIGHT SLEEVES

COMMENT: TAY PHAI-VCX1

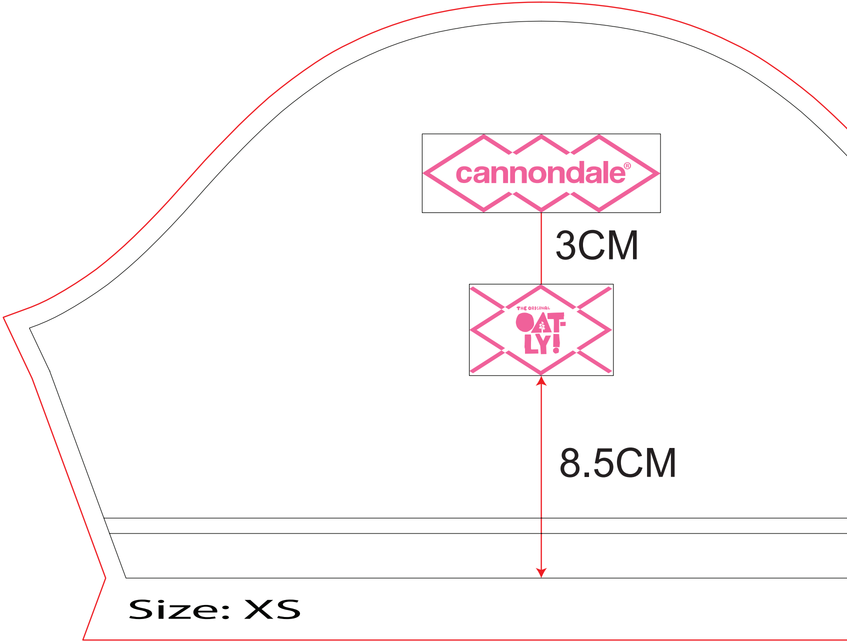
cannondale®
THE ORIGINAL OATLY!
3CM
8.5CM
Size: XS

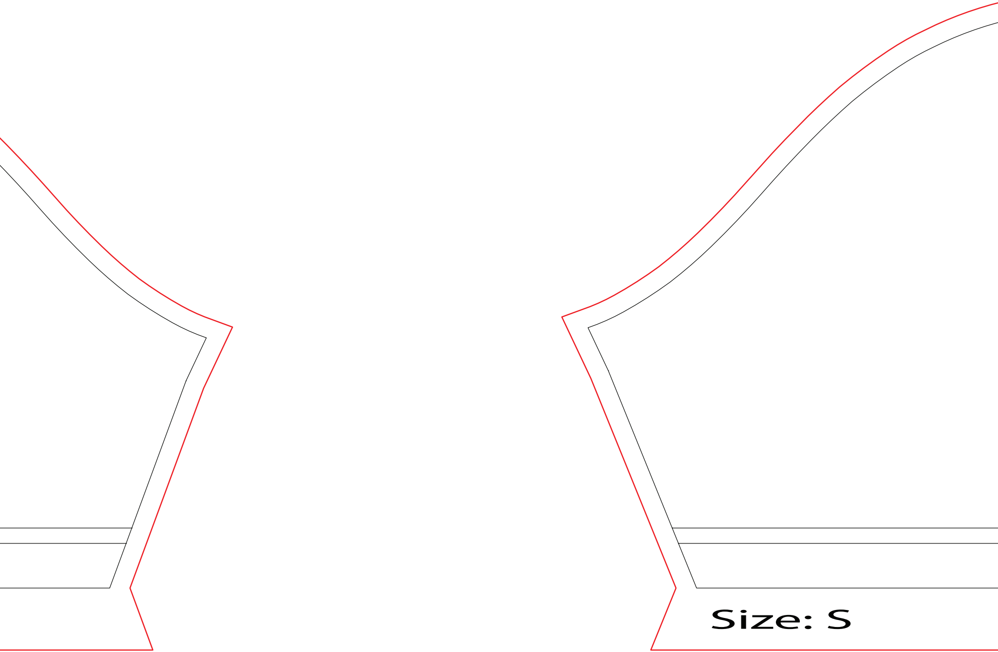

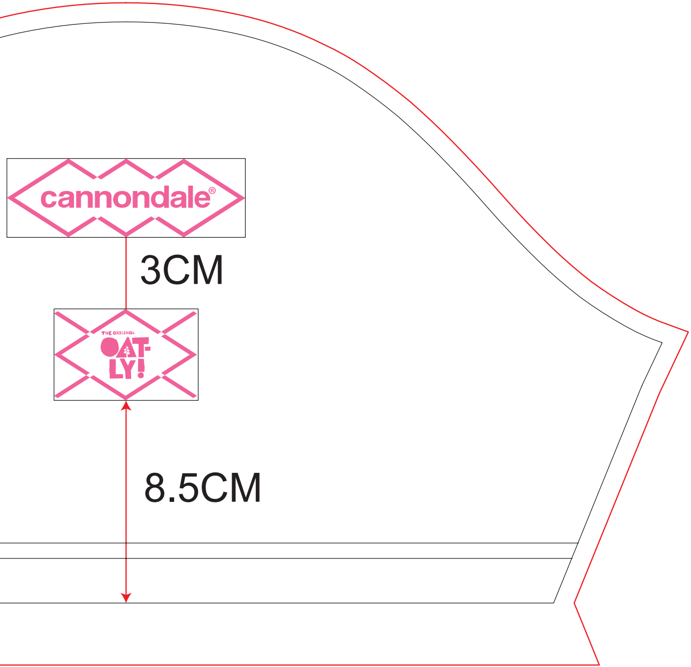
cannondale®
3CM
THE ORIGINAL
OAT-
LY!
8.5CM

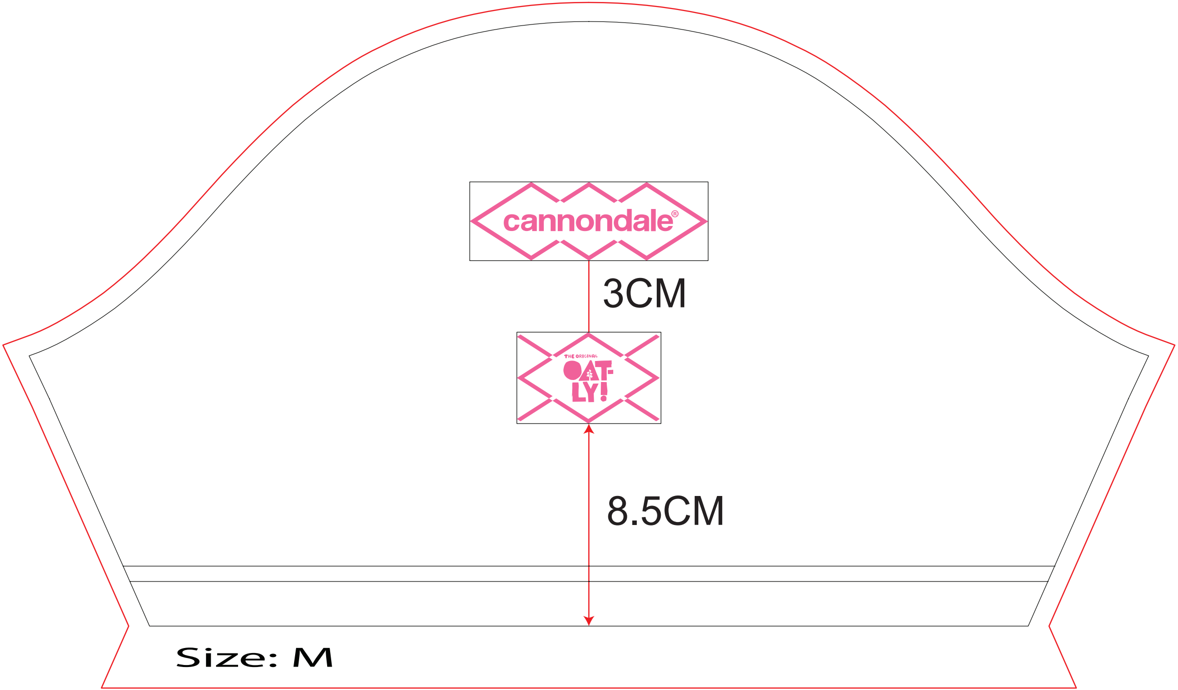
cannondale®
3CM
THE ORIGINAL
OAT-
LY!
8.5CM
Size: M

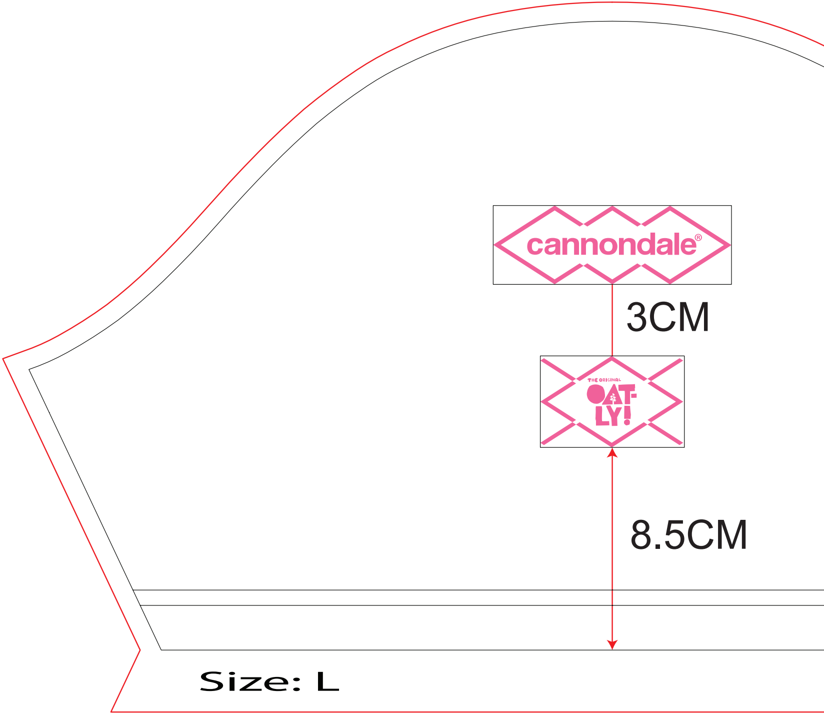
cannondale®
THE ORIGINAL OATLY!
3CM
8.5CM
Size: L

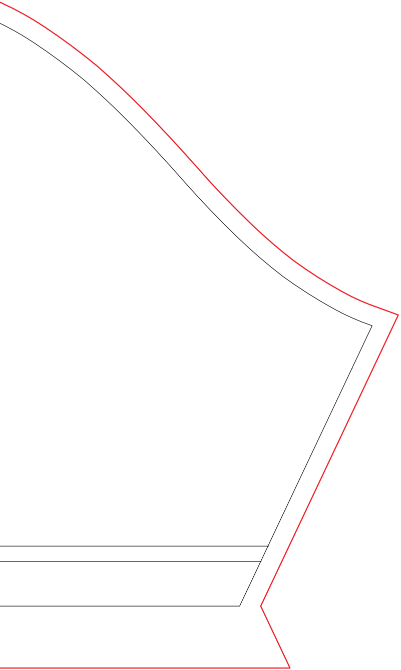

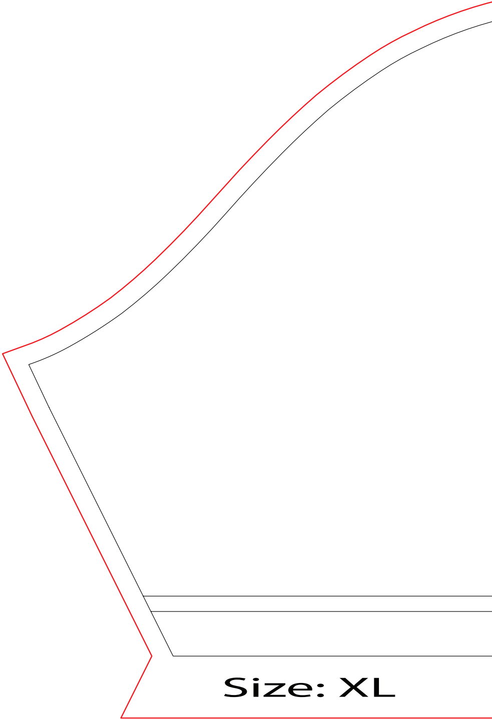

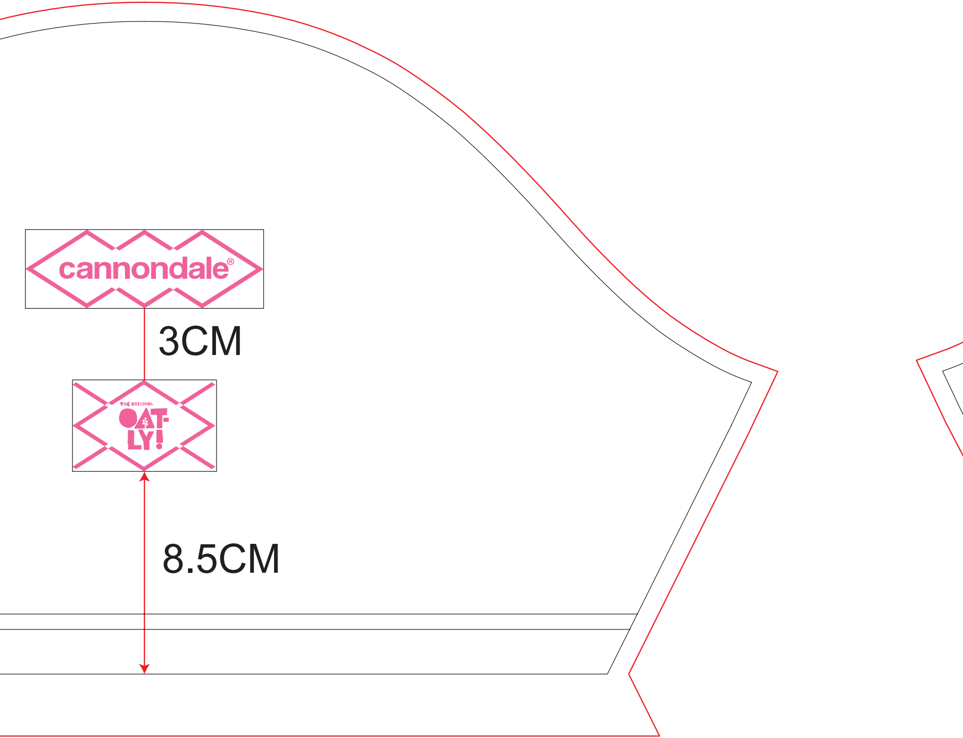
cannondale®
THE ORIGINAL
OAT-
LY!
3CM
8.5CM

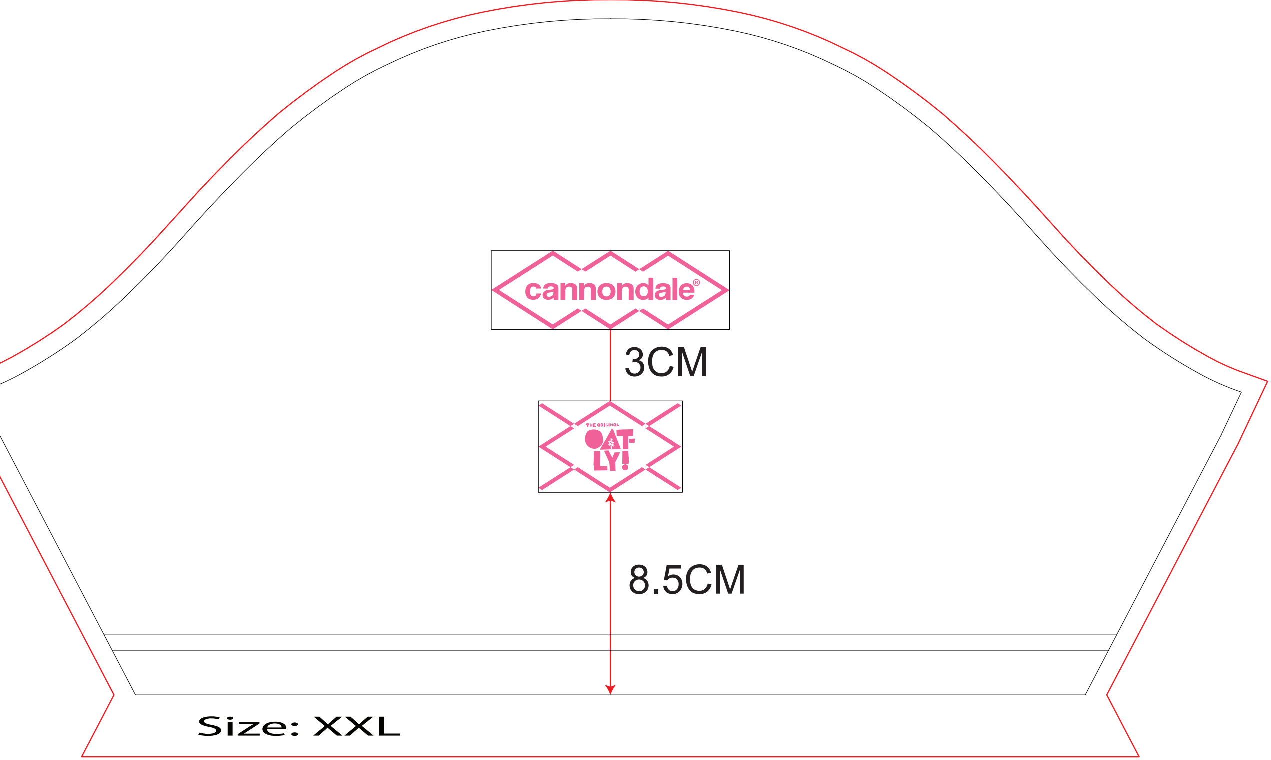
cannondale®
THE ORIGINAL
OAT-
LY!
3CM
8.5CM
Size: XXL

LEFT SLEEVES

COMMENT: TAY TRAI-VCX1

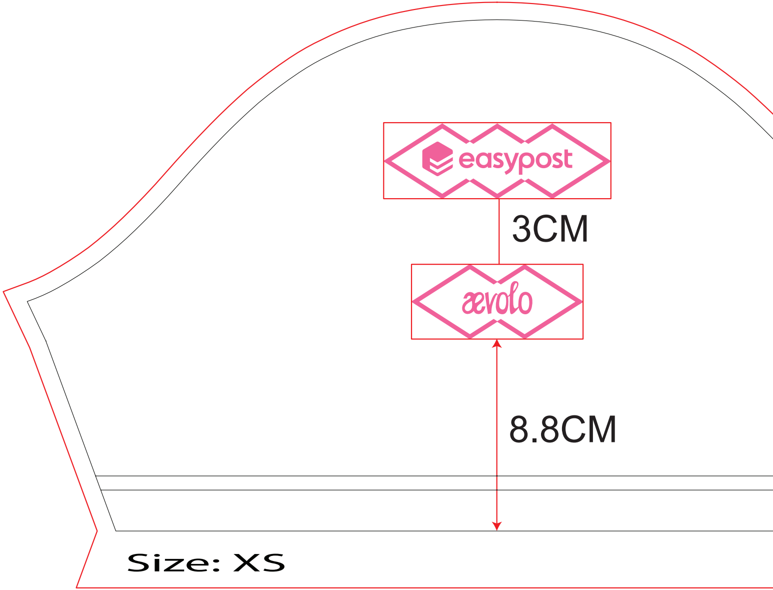
easypost
aevolo
3CM
8.8CM
Size: XS

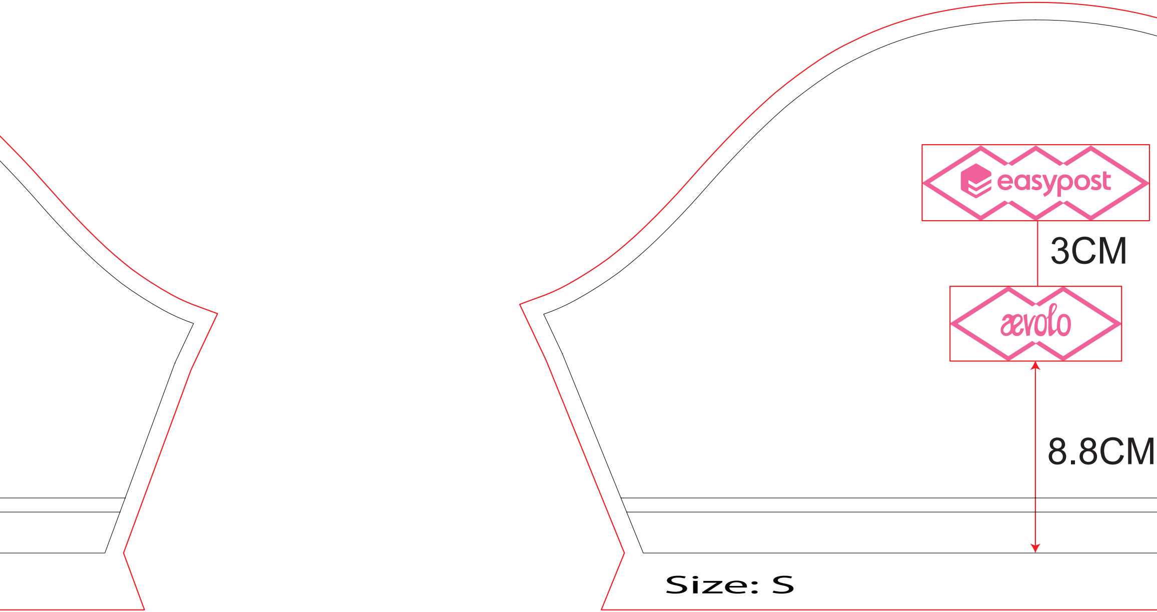
easypost
æ
volo
3CM
8.8CM
Size: S

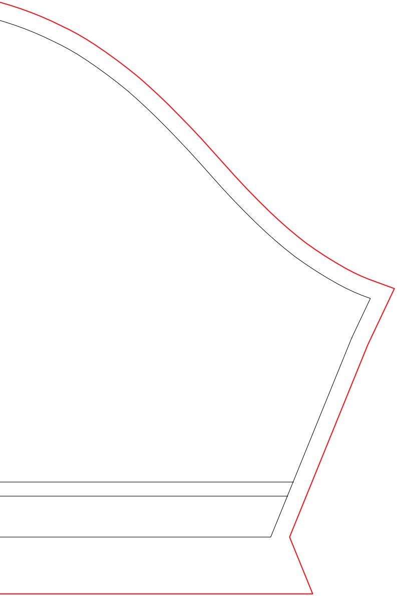

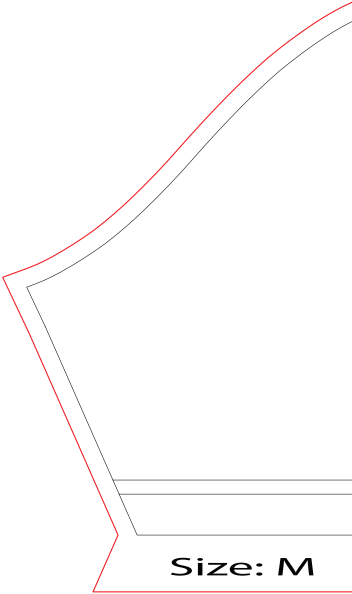

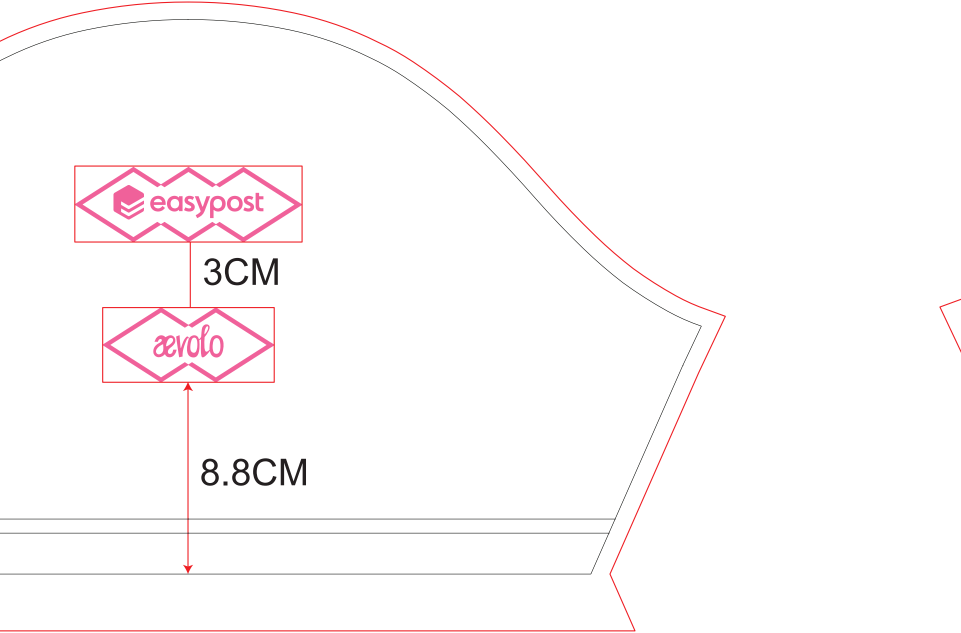
easypost
3CM
ævolo
8.8CM

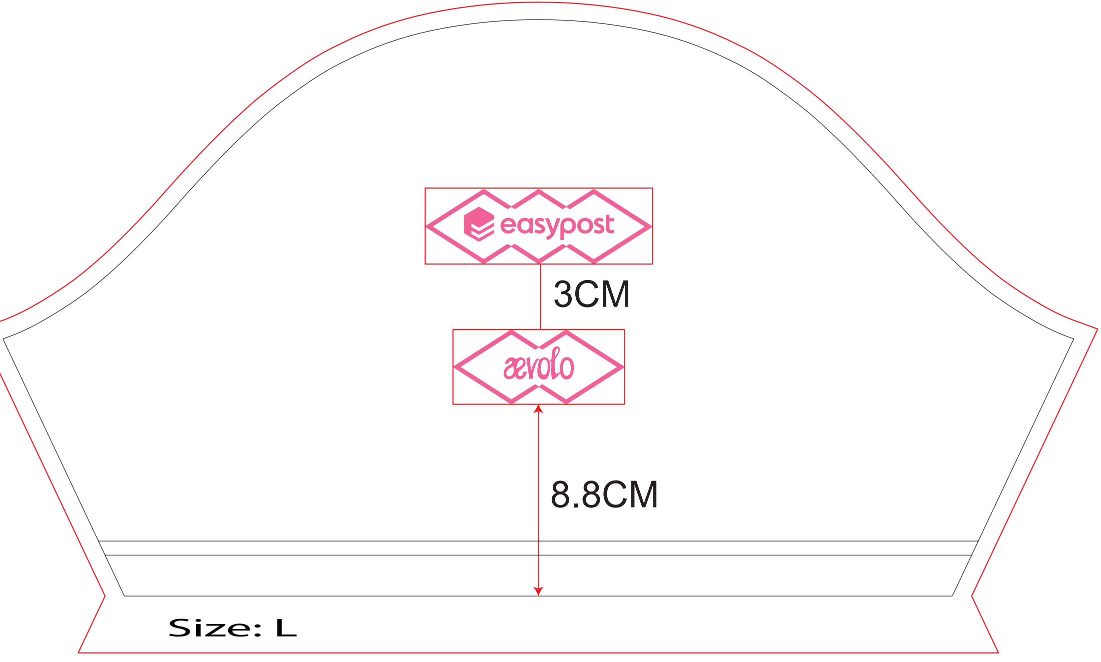
easypost
3CM
aevolo
8.8CM
Size: L

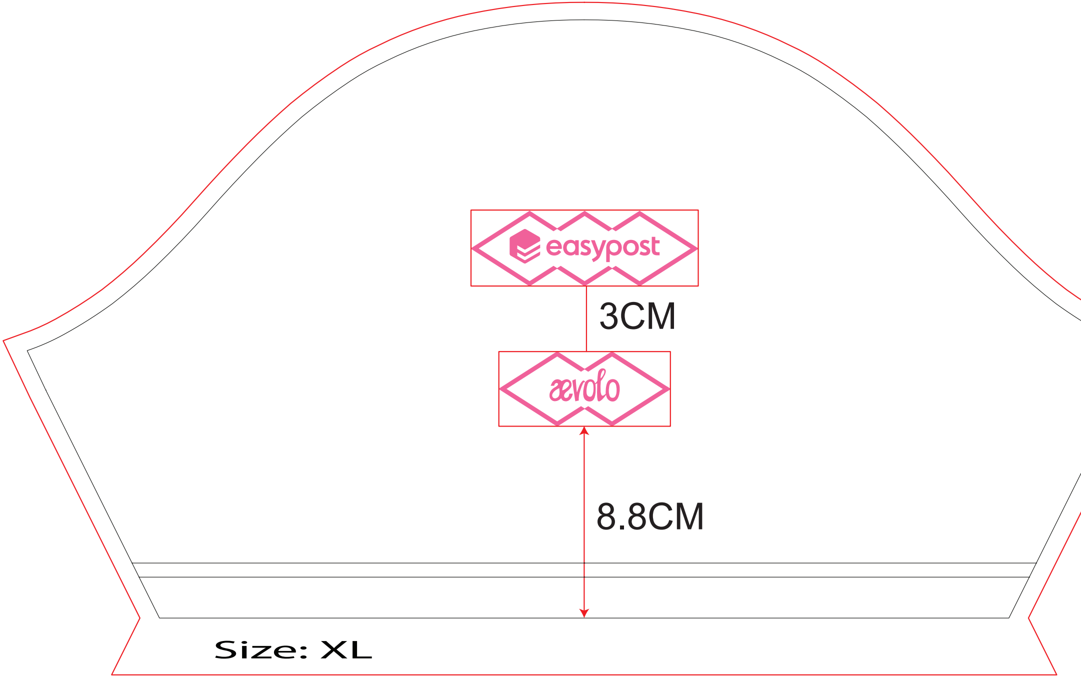
easypost
ævolo
3CM
8.8CM
Size: XL

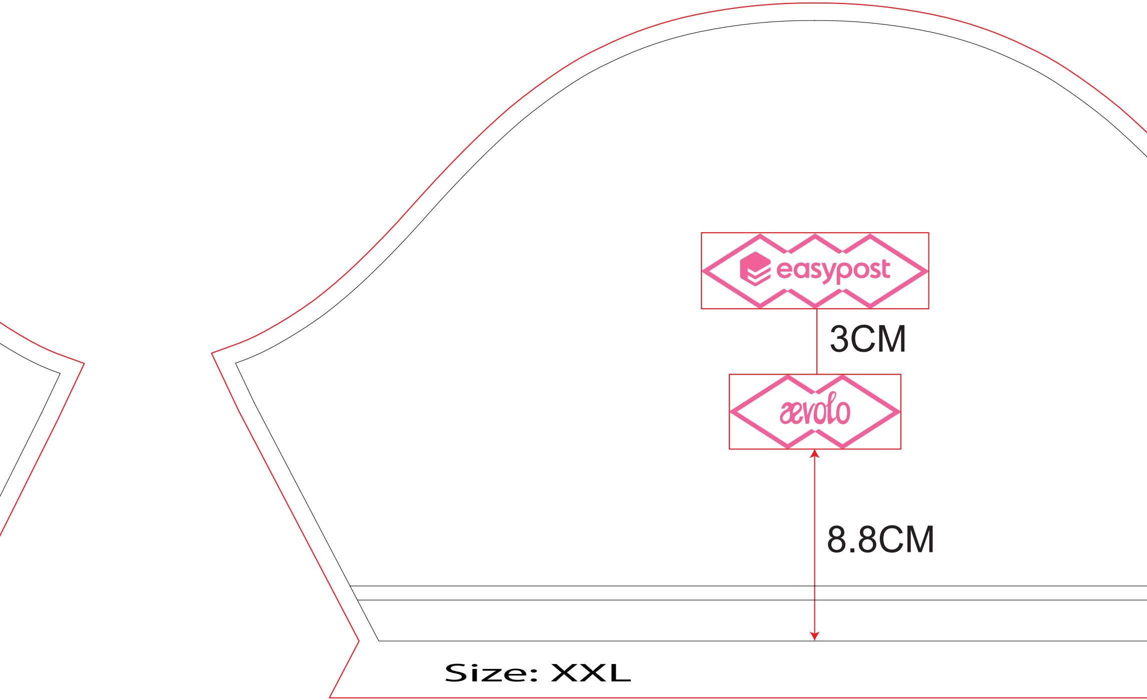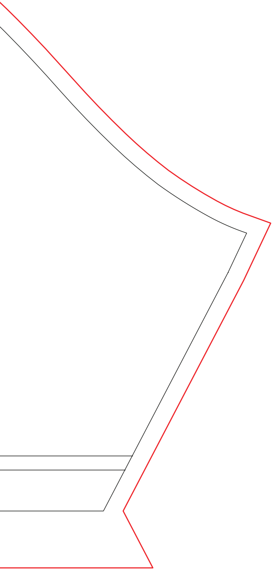
easypost
3CM
ævolo
8.8CM
Size: XXL