rì

RIGHT SLEEVES

COMMENT: TAY PHAI-VCX1

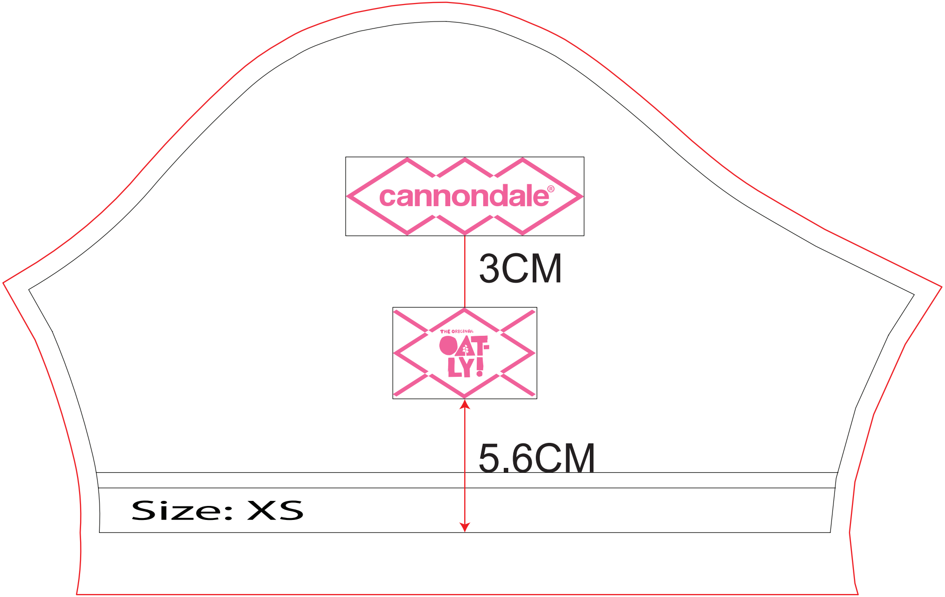
cannondale®
THE ORIGINAL
OAT-LY!
3CM
5.6CM
Size: XS

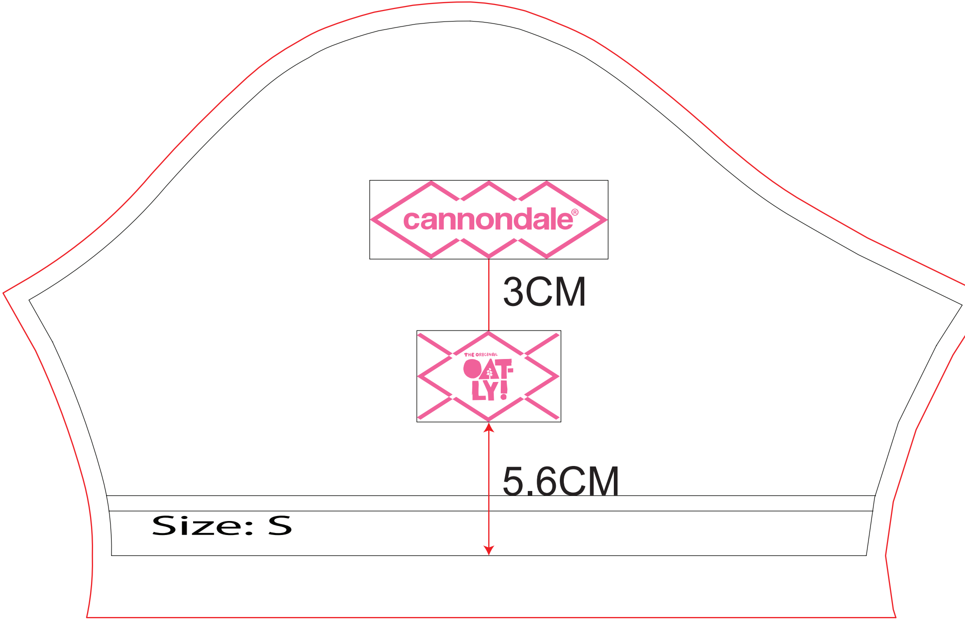
cannondale®
THE ORIGINAL
OAT-LY!
3CM
5.6CM
Size: S

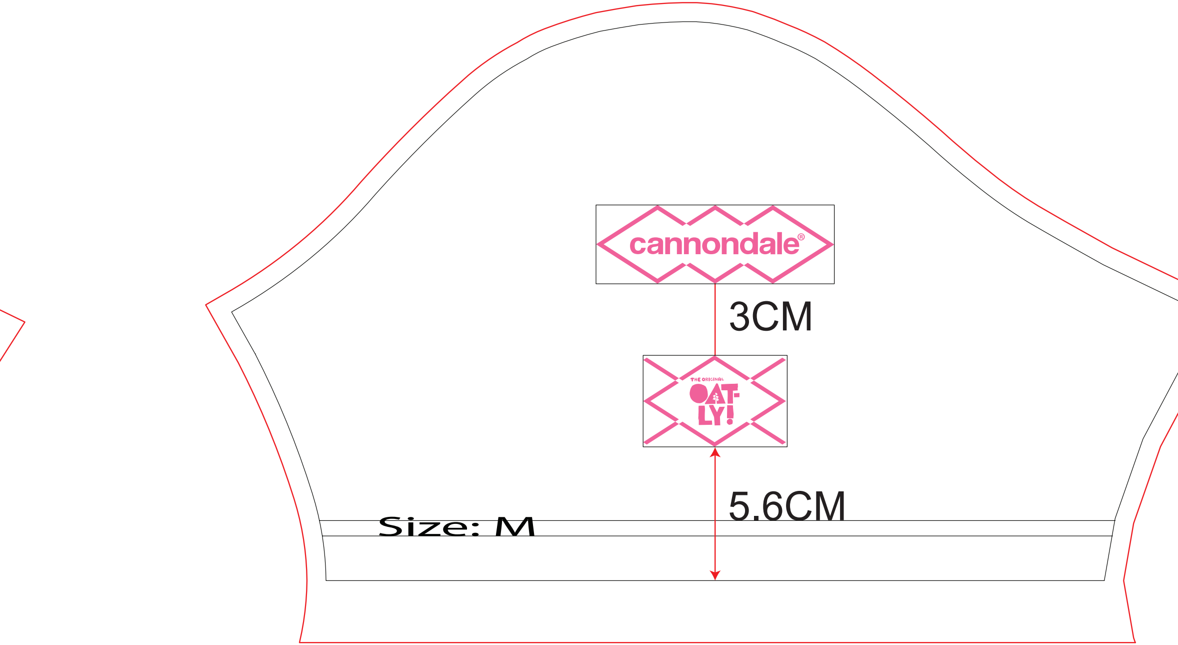
cannondale®
3CM
THE ORIGINAL
OAT-LY!
5.6CM
Size: M

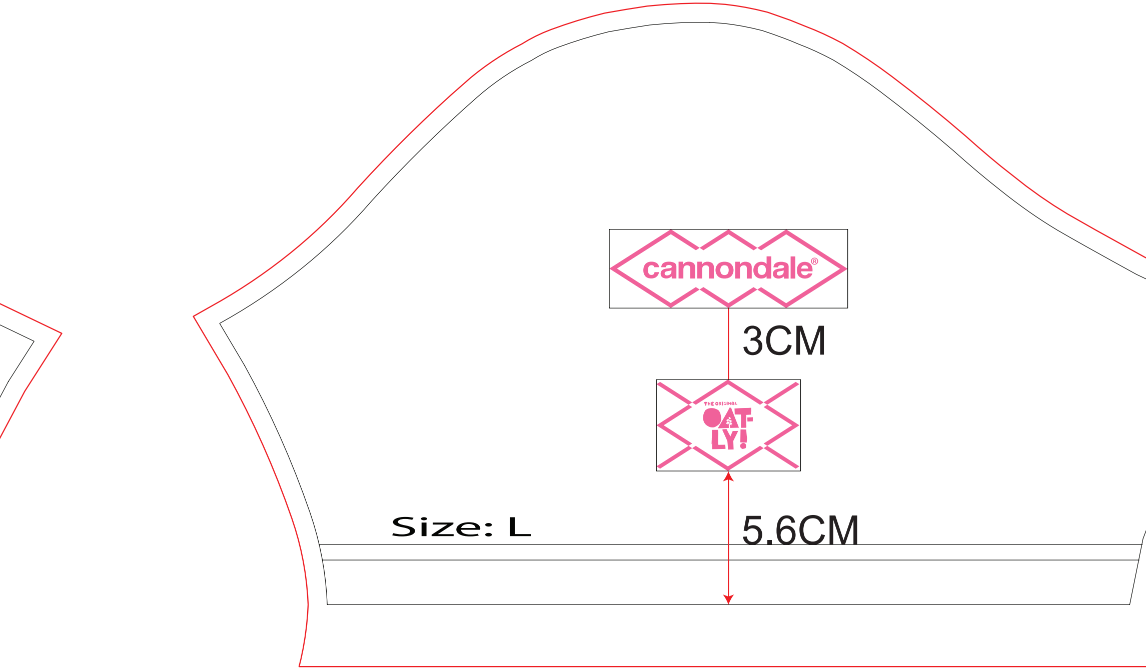
cannondale®
3CM
THE ORIGINAL OATLY!
Size: L
5.6CM

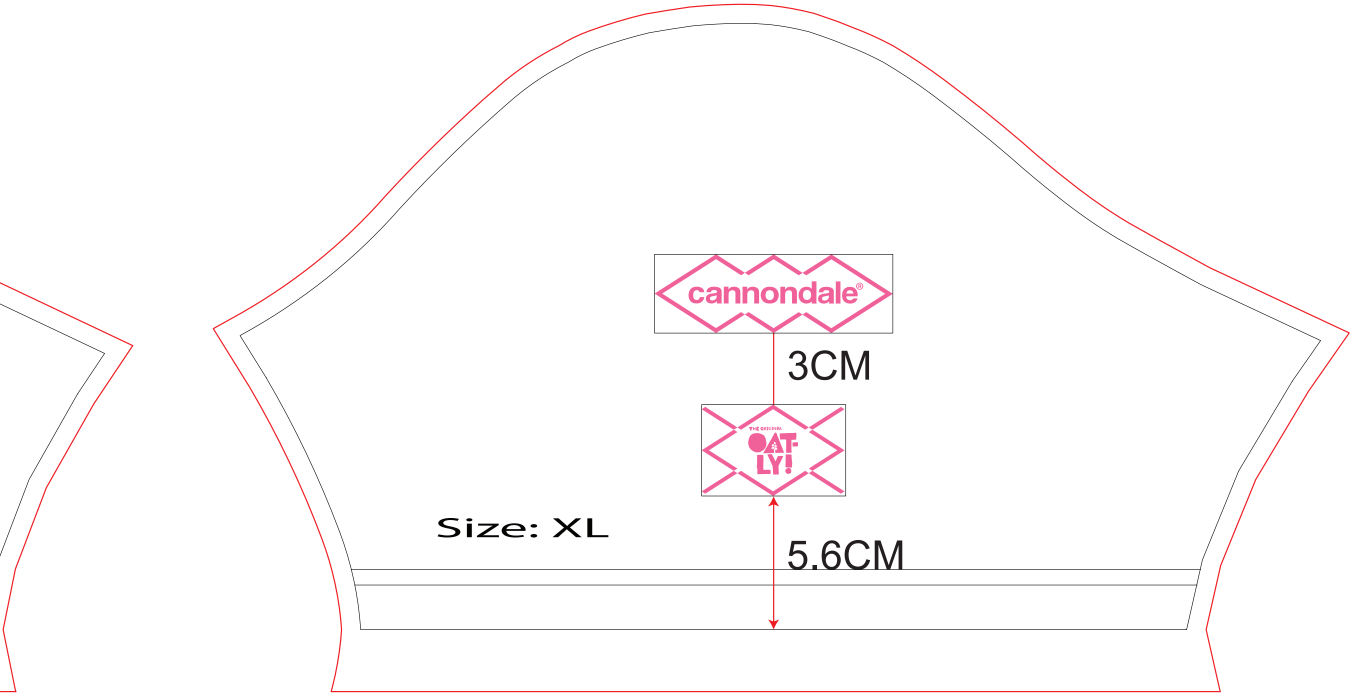
cannondale®
3CM
THE ORIGINAL OATLY!
Size: XL
5.6CM

r

LEFT SLEEVES

COMMENT: TAY TRAI-VCX1

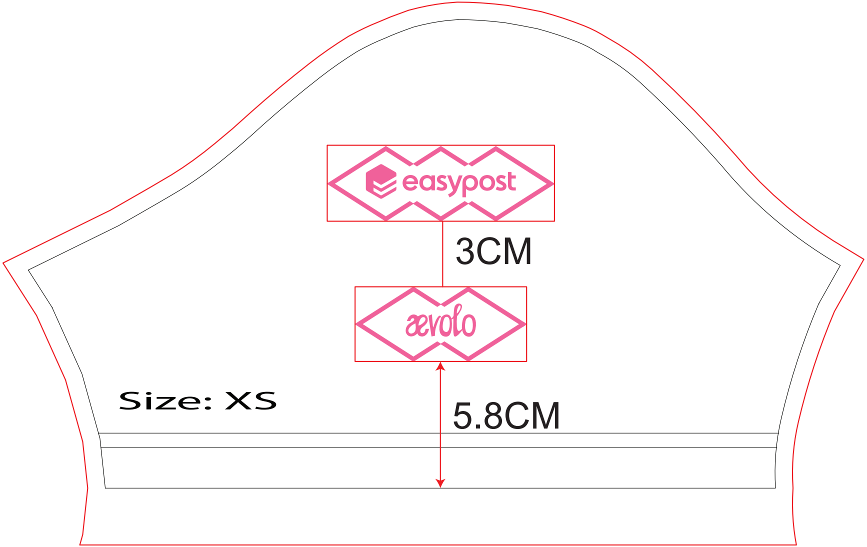
easypost
3CM
aevolo
Size: XS
5.8CM

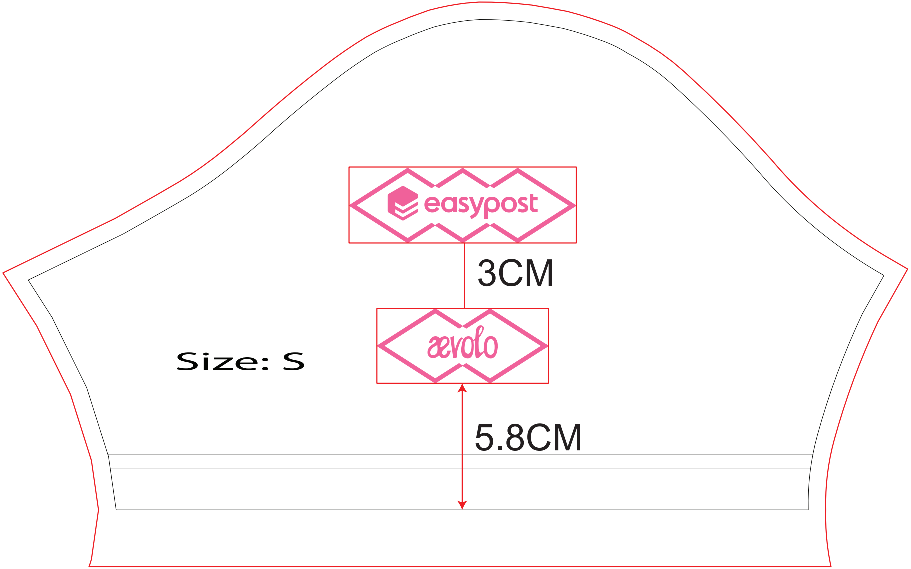
easypost
3CM
Size: S
ævolo
5.8CM

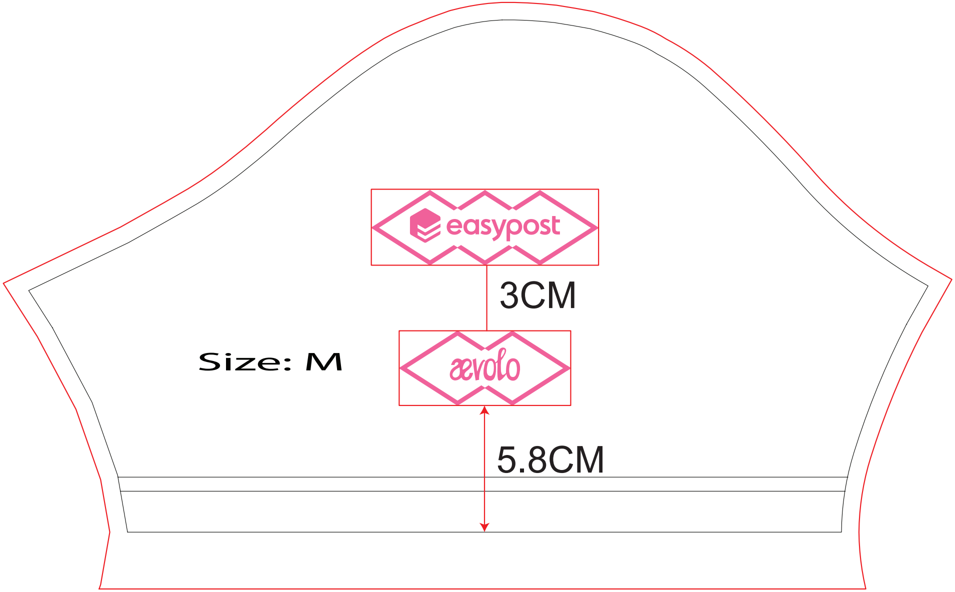
easypost
3CM
Size: M
ævolo
5.8CM

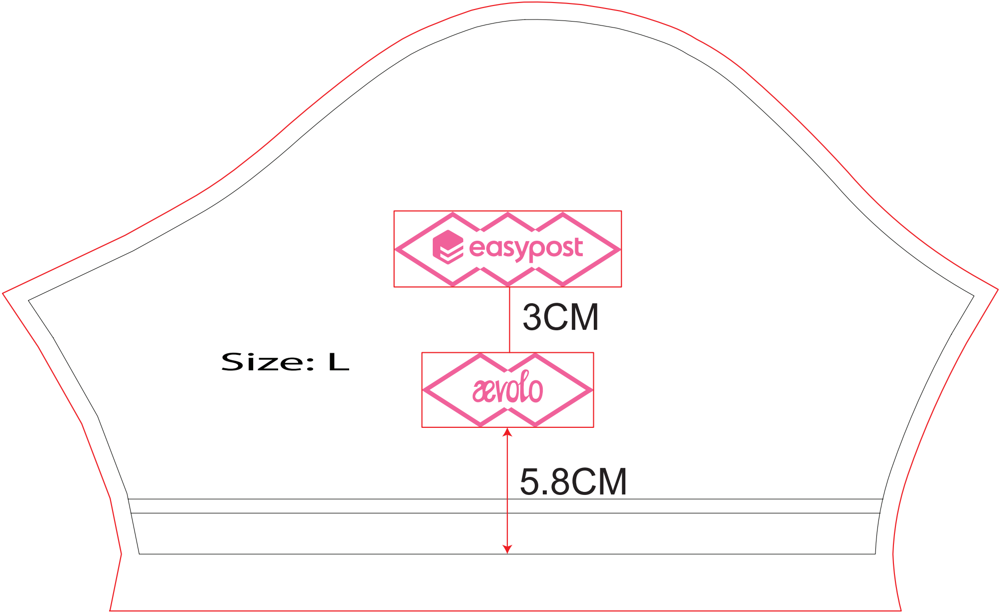
easypost
3CM
Size: L
ævolo
5.8CM

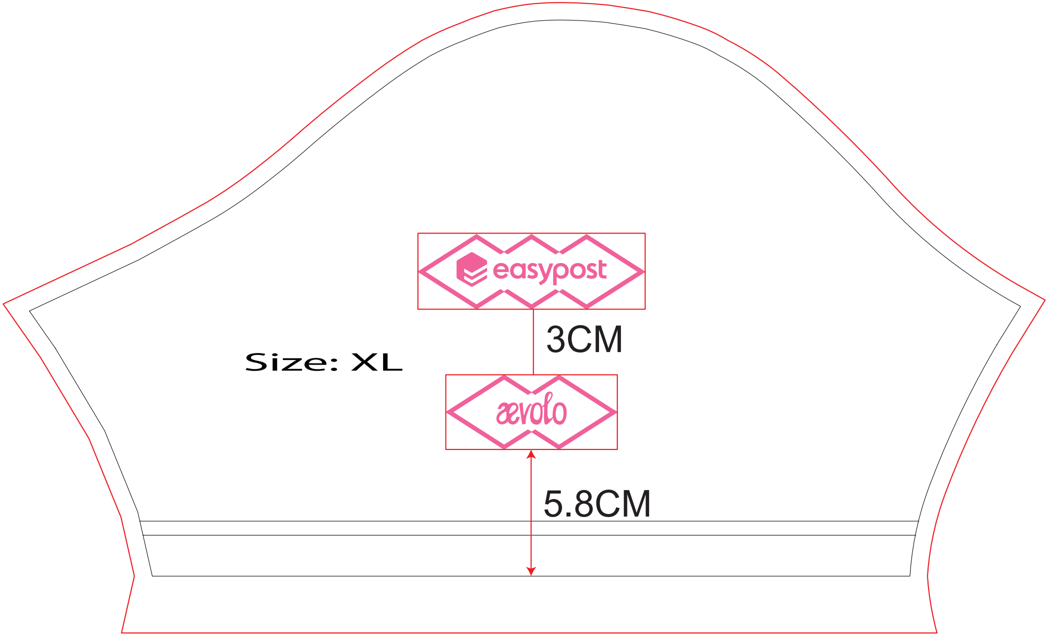
easypost
3CM
Size: XL
ævolo
5.8CM